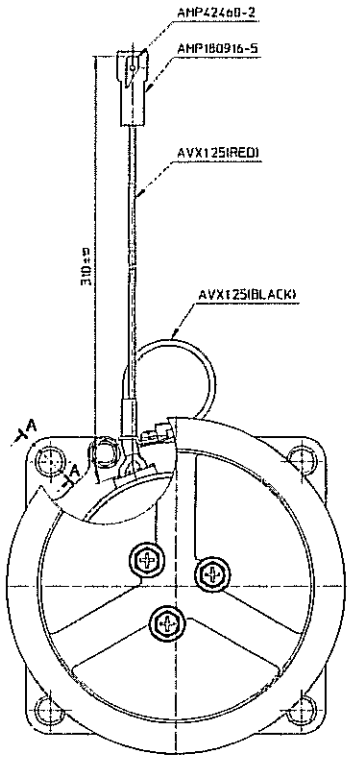


PARTIAL SECT. A–A

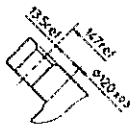


PARTIAL SECT. B–B

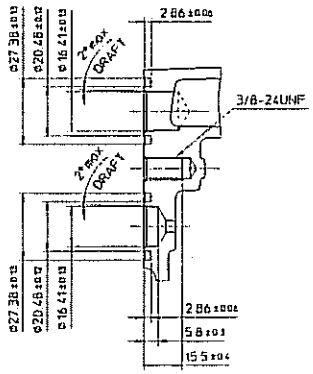


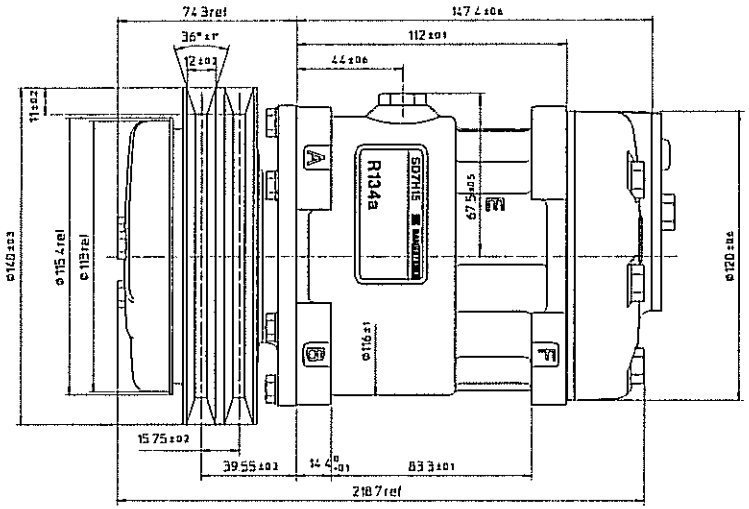


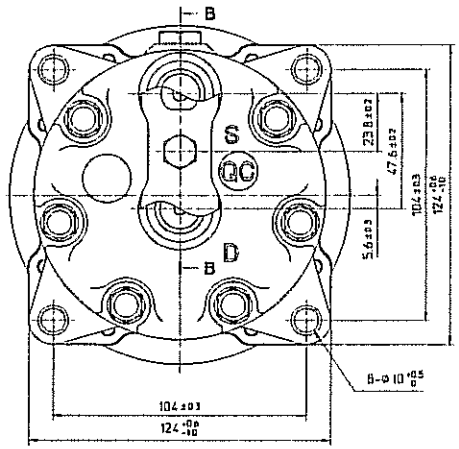


## COMPRESSOR SPECIFICATIONS

| | | |
|---|---|---|
| BORE | ø29.3 | mm |
| STROKE | 32.8 | mm |
| NUMBER OF CYLINDERS | 7 | |
| DISPLACEMENT PER REVOLUTION | 154.9 | cc/rev |
| MAXIMUM ALLOWABLE CONTINUOUS SPEED | 5000 | rpm |
| MAXIMUM DOWNSHIFT SPEED | 5000 | rpm |
| REFRIGERANT | R134a | |
| OIL | SP-10 OR EQUIVALENT | |
| OIL CHARGE | 190 | cc |
| ROTATION (CLUTCH SIDE VIEW) | CLOCKWISE | |
| WEIGHT | | kg |

## CLUTCH SPECIFICATIONS

| | | |
|---|---|---|
| RATED VOLTAGE | DC 12 | V |
| MINIMUM BREAKAWAY TORQUE | 3.5 | kg·m |
| MINIMUM ENGAGEMENT VOLTAGE | DC 7.5 | V |
| MAXIMUM POWER CONSUMPTION | 43 | W |
| MAXIMUM ALLOWABLE CONTINUOUS SPEED | 5000 | rpm |
| MAXIMUM DOWNSHIFT SPEED | 5000 | rpm |
| BELT TYPE | A | TYPE |
| PULLEY DIAMETER | ø140 | mm |
| WEIGHT | | kg |

| NO | REVISION HEADING | BY | DATE |
|---|---|---|---|

MATERIAL — PART NO — NAME: COMPRESSOR

THIRD ANGLE PROJECTION — SCALE 1:1

DESIGNED BY — DATE

CHECKED BY — DATE

APPROVED BY — DATE

MODEL: SD7H150C

DRAWING NO: 8088 - 6000

SANDEN — SANDEN CORPORATION / SANDEN INTERNATIONAL CORPORATION