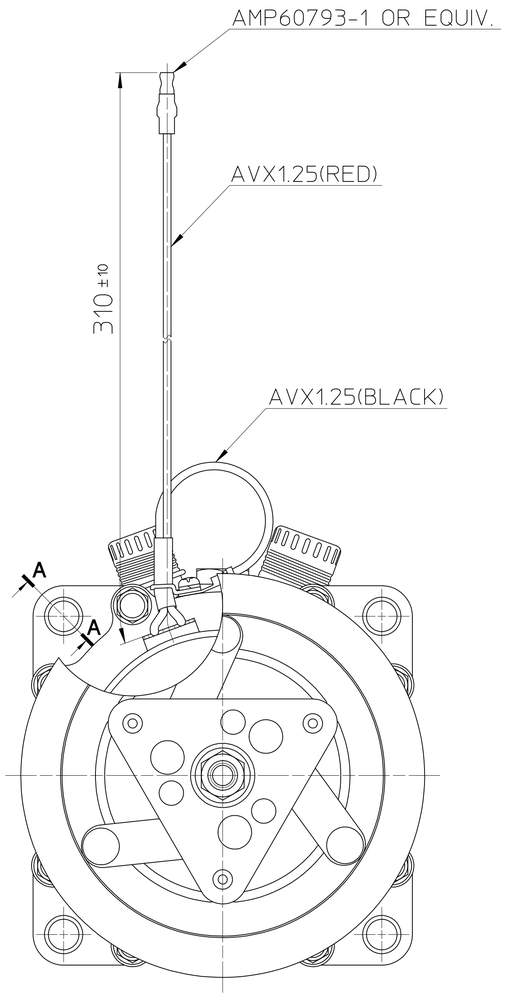

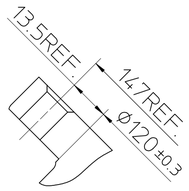

PARTIAL SECT. A–A

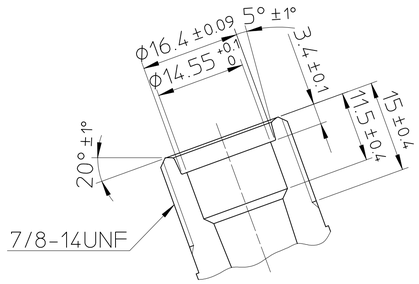

PARTIAL SECT.B–B(2:1)

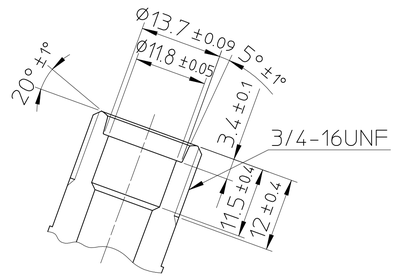

PARTIAL SECT.C–C(2:1)

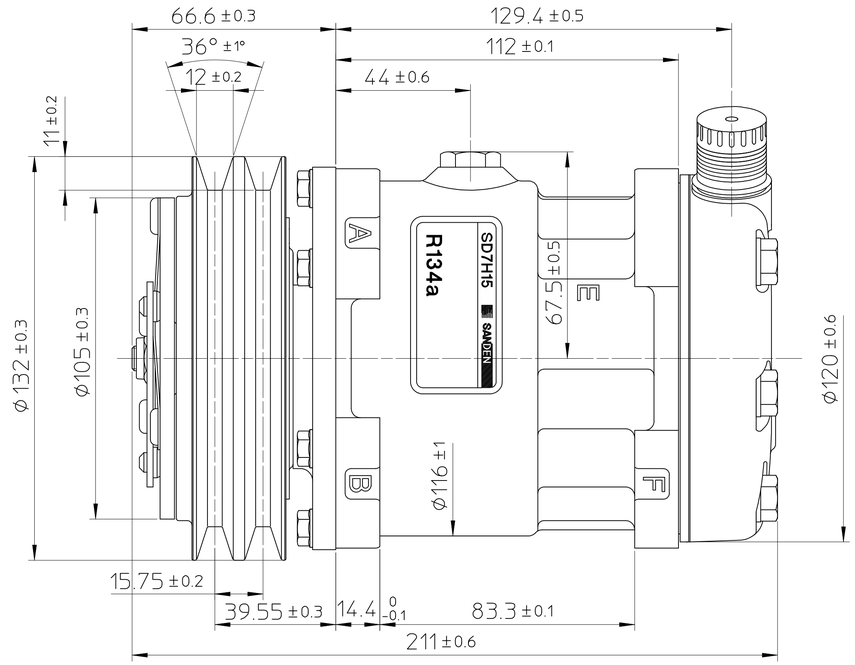

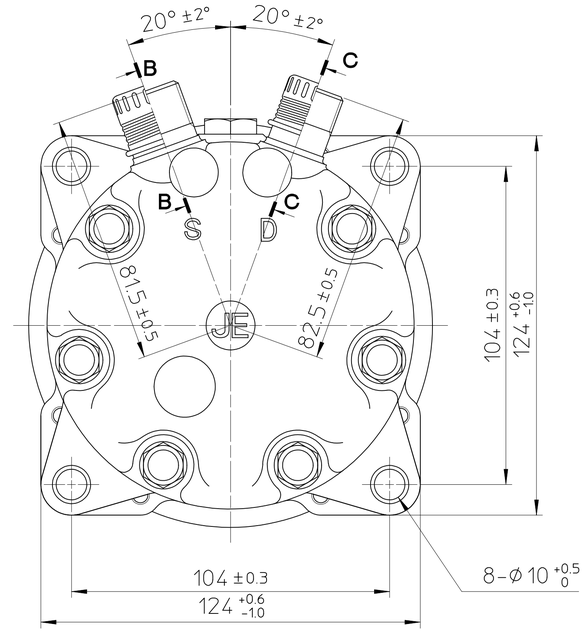

COMPRESSOR SPECIFICATIONS

BORE	ø 29.3	mm
STROKE	32.8	mm
DISPLACEMENT PER REVOLUTION	154.9	cc/rev.
ROTATION	CLOCKWISE	
NUMBER OF CYLINDERS	7	
MAXIMUM ALLOWABLE r.p.m.	7000	r.p.m.
MAXIMUM ALLOWABLE CONTINUOUS r.p.m.	6000	r.p.m.
REFRIGERANT	R-134a	
OIL : SP-10 OR EQUIV.	135	cc
WEIGHT		kg

CLUTCH SPECIFICATIONS

RATED VOLTAGE	DC 12 V	
BREAKAWAY TORQUE	3.5	kg-m
MINIMUM ENGAGEMENT VOLTAGE	7.5	V MAX.
POWER CONSUMPTION	43	W (CU)
MAXIMUM ALLOWABLE r.p.m.	7000	r.p.m.
MAXIMUM ALLOWABLE CONTINUOUS r.p.m.	6000	r.p.m.
BELT TYPE	A	TYPE
PULLEY DIAMETER	ø 132	mm
WEIGHT		kg

8024

UNCONTROLLED COPY

NO.	REVISION RECORD	BY	DATE
△			. .
△			. .
△			. .
△			. .
△			. .

MATERIAL		PART NO.	8024
THIRD ANGLE PROJECTION		SCALE	1 : 1
DESIGNED BY	M.Fujii	DATE	6.Dec.1996
CHECKED BY	Y.Uchiyama	DATE	9.Dec.1996
APPROVED BY	H.Akabane	DATE	9.Dec.1996

NAME	COMPRESSOR
MODEL	SD7H15JE8024
DRAWING NO.	8024 – 6000

SANDEN SANDEN CORPORATION SANDEN INTERNATIONAL CORPORATION