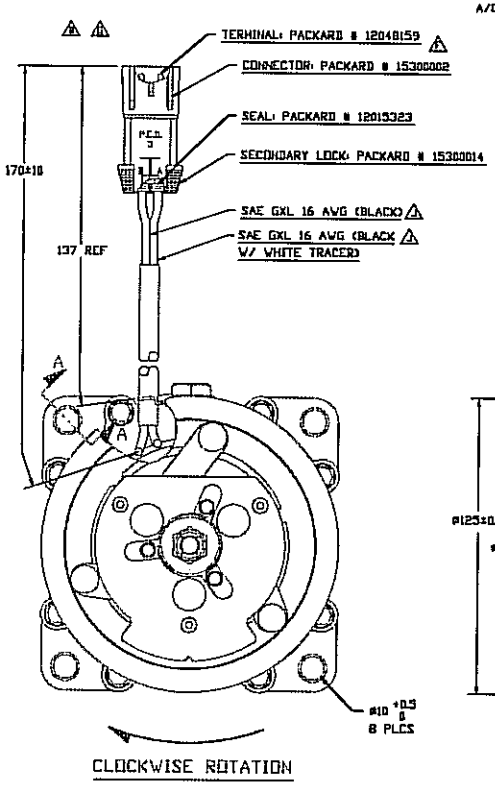

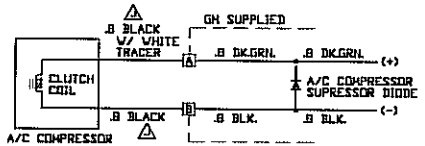

REFERRAL INFO. ONLY

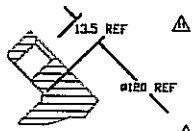

SECTION A-A

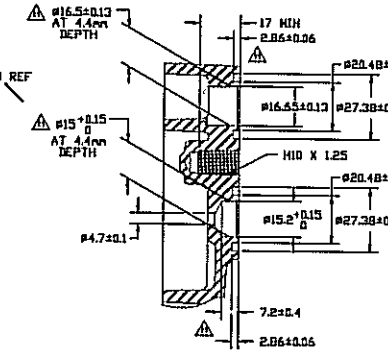

SECTION E-E

(SECTION WITH O-RINGS, SHIPPING PAD ASSEMBLY, AND BOLT REMOVED)

NOTE:

1. ANY CHANGES TO THIS DESIGN, INCLUDING ANY CHANGES TO DETAILS OF THE DESIGN NOT SHOWN ON THIS DRAWING, MUST BE APPROVED BY THE GM TRUCK & BUS DESIGN RESPONSIBLE ENGINEER, AND A REVISED DRAWING RELEASED WHICH HAS CHANGE DATES, CHANGE DESCRIPTION, AND CHANGE AUTHORITY FOR ALL CHANGES.
2. THIS PRODUCT MEETS THE REQUIREMENTS OF SANDEN ENGINEERING SPECIFICATION SES-EC-214.

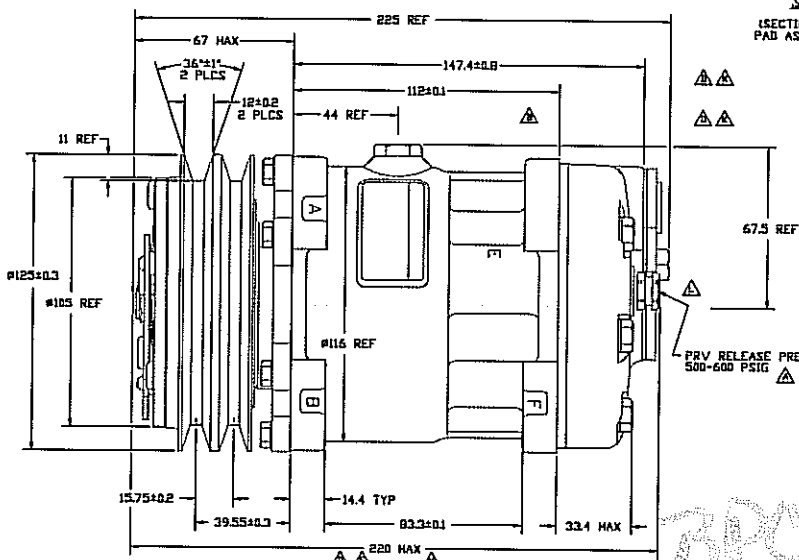

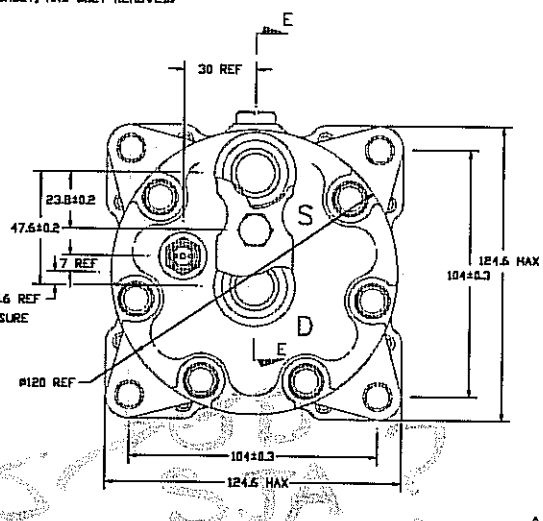

COMPRESSOR SPECIFICATIONS

DISPLACEMENT PER REVOLUTION	154.9 cc / rev. (9.5cuin. / rev.)
MAXIMUM ALLOWABLE R.P.M.	8000 R.P.M.
MAXIMUM ALLOWABLE CONTINUOUS R.P.M.	6000 R.P.M.
REFRIGERANT	R134a
OIL (SP-15)	270 cc (9.1 fl.oz.)
WEIGHT	7.5 kg (15.7 lb.)
CUSTOMER PART NUMBER	15020478

CLUTCH SPECIFICATIONS

MAXIMUM RATED VOLTAGE	DC 16V
BREAKAWAY TORQUE	3.5 kgf-m min. @ 12V
MINIMUM ENGAGEMENT VOLTAGE @ 20°C	9.3VDC @ AIR GAP 0.8mm
COIL RESISTANCE @ 20°C	3.15 ±0.15 ohms
COIL RESISTANCE @ 121°C	4.4 ohms (normal)
POWER CONSUMPTION	49 watts max.
BELT TYPE	A TYPE
MAXIMUM ALLOWABLE BELT TENSION	50 kgf per belt
PULLEY DIAMETER	ø125mm (4.9 in)
CLUTCH TYPE	STANDARD

PROD. NO.	REV.	DATE	REVISIONS	DWN	DSGN	CHK	APPV
7H8	A	4/28/98	ADDED PRV RELEASE PRESSURE 500-600 PSIG AND TEMP. RATE AT MINIMUM ENGAGEMENT VOLTAGE. CHANGED CUS. ID#-000 TO DEL. CHANGED MATL SELECTION REF. IN THE CLUTCH SPECIFICATION.	RH	DT	DT	JB
8H2	A	5/26/98	ADD NOTE 4 MODEL NO.& LABEL: CHG COMPRESSOR WAS 7H8.3AC - 10-7000-0	DRL	DRL	CHA	JB
8H8	A	10/20/98	CHANGED 07MM OIL FLOW WAS 0.5MM OIL FLOW	PV	DRL	CHA	JB
9C2B2	A	10/1/98	CHANGED DESCRIPTION ALL MAX WAS 20.2MM MAX 17.3 MAX WAS 20.2MM MAX AND 17.3 REF WAS 20.2 MAX	PV	PV	DRL	CHA
9C2B2	A	10/13/98	CHANGED DESCRIPTION 20.2 MAX WAS 17.3 REF	PV	PV	CHA	CHA
9H2M	A	11/4/98	CHANGED TERMINAL P/N WAS REMOVED NEW DRAWING	RH	RH	RK	CHA
9H2L1 9C2B2	A	12/13/98	ADDED NOTE 8 ADDED PROPRIETARY NOTE AND UPDATED TO CURRENT STYLE.	RH	DD	DRL	CHA TS
8T2L1 9T2M2	A	1/11/99	CHANGED CLUTCHES P/N WAS 2H8M77 REMOVED LABEL DETAIL ADDED 4.4mm DEPTH TO SECTION E-E REMOVED 4.4 REF ON PLCS2	RH	DD	DRL	CHA TS
9H2M1	A	01/15/99	SAE GXL 16 AWG (BLACK) WAS REV LEAD WIRE, SAE GXL 16 AWG (BLACK W/ WHITE TRACER) WAS ANY LEAD WIRE	JS	DS	DRL	CHA
9T2M1 9H2M2	A	7/28/99	NEW MAX WAS 20.2 MAX DELETED 17.3 MAX DELETED 20.2 REF UPDATE TITLE BLOCK	RSR	LK	DRL	DS
2H2M2T	A	4/5/01	UPDATED DRAWING WITH EVE 2H2M2C	JS	LK	DRL	DS
2H2C2B	A		CHG. DP-15 WAS SP-15	JS			

A			
A			
A			
A			

DO NOT SCALE

SANDEN

SANDEN CORPORATION (USA) INC.

DRAWN BY: H | DATE: 2/11/99 | SCALE: NOT | SHEET: 1 OF 1 | METRIC

This drawing and the information contained herein are CONFIDENTIAL and PROPRIETARY to Sanden International (U.S.A.) Inc. and contained in CONFIDENCE and shall not be used, loaned, or disclosed to others without the written permission of Sanden International (U.S.A.) Inc.

INTERPRETATION OF THIS DRAWING PER ASME Y14.5M-1994

THIRD ANGLE PROJECTION

SIZE: D

MATERIAL:

NAME: COMPRESSOR

DWG. NO.: 7803-6000 | REV: M