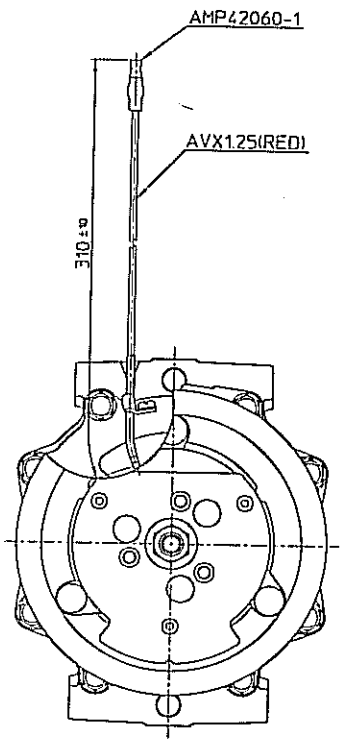

FOR REFERENCE ONLY
NOT A CONTROLLED
DOCUMENT

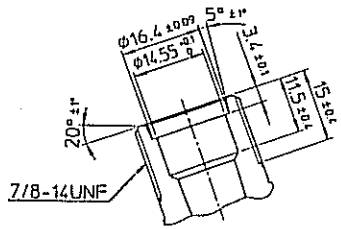

PARTIAL SECT.B–B(2:1)

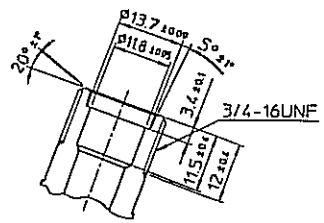

PARTIAL SECT.C–C(2:1)

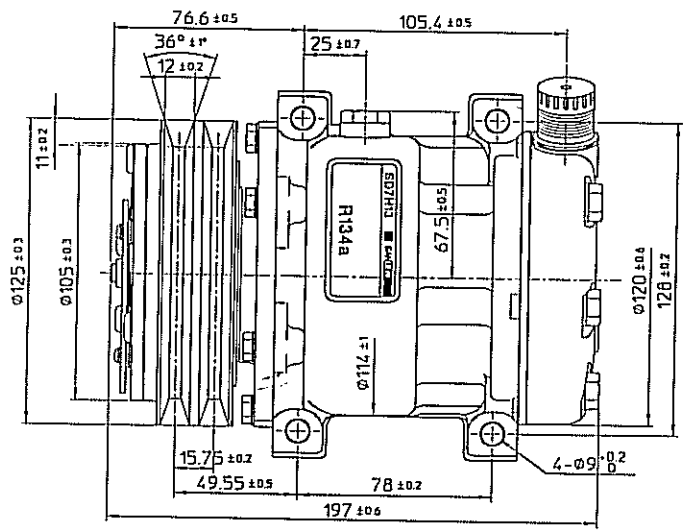

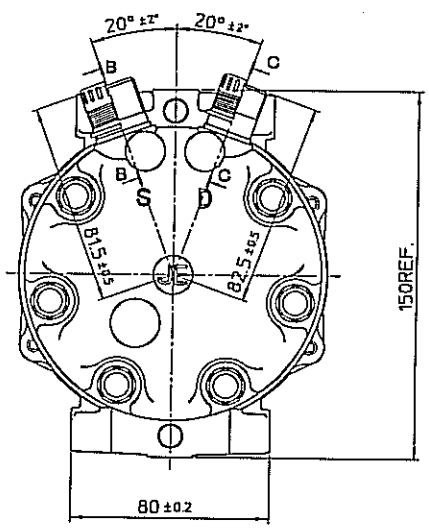

COMPRESSOR SPECIFICATIONS

BORE	Ø29.3	mm (	1.15	in)
STROKE	27.4	mm (	1.08	in)
DISPLACEMENT PER REVOLUTION	129.2	cc/rev.(	7.9	cu.in./rev.)
NUMBER OF CYLINDERS	7			
MAXIMUM ALLOWABLE r.p.m.	7000	r.p.m.		
MAXIMUM ALLOWABLE CONTINUOUS r.p.m.	6000	r.p.m.		
REFRIGERANT	R-134a			
OIL (SP-20 OR EQUIV.)	135	cc (	4.6	fl.oz.)
WEIGHT		kg (		lb)

CLUTCH SPECIFICATIONS

RATED VOLTAGE	DC 12 V			
BREAKAWAY TORQUE	3.2	kg-m (	23.1	ft-lb)
MINIMUM ENGAGEMENT VOLTAGE	7.5	V MAX.		
POWER CONSUMPTION	49	W (CU)		
MAXIMUM ALLOWABLE r.p.m.	7000	r.p.m.		
MAXIMUM ALLOWABLE CONTINUOUS r.p.m.	6000	r.p.m.		
BELT TYPE	A	TYPE		
PULLEY DIAMETER	Ø125	mm (	4.9	in)
WEIGHT		kg (		lb)

MATERIAL		PART NO.	7321	NAME	COMPRESSOR
THIRD ANGLE PROJECTION		SCALE	1 : 1		
DESIGN BY		DATE	23 . Feb . 1996	MODEL	SD7H13JE7321
CHECKED BY		DATE	23 . Feb . 1996		
APPROVED BY		DATE	23 . FEB . 1996	DRAWING NO.	7321–6000
NO.	REVISION RECORD	BY	DATE		