OFFICIAL DRAWING

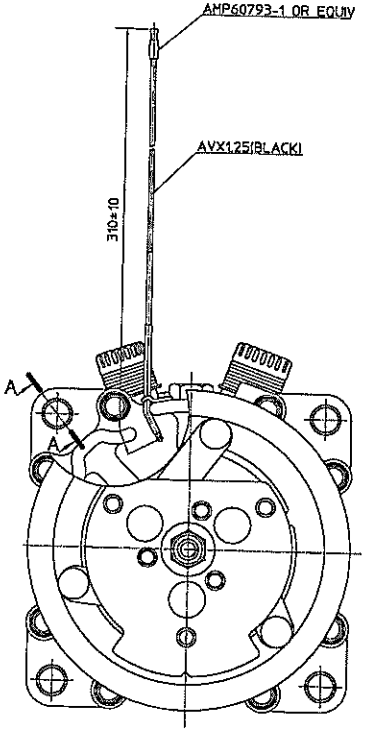

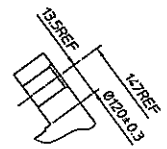

PARTIAL SECT A–A

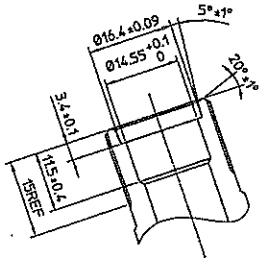

PARTIAL SECT B–B (2:1)

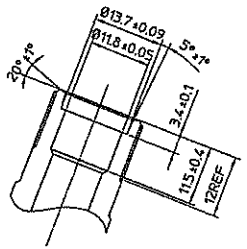

PARTIAL SECT C–C (2:1)

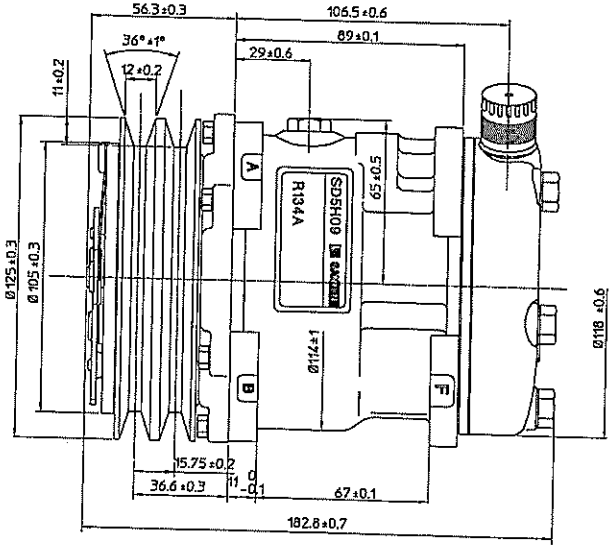

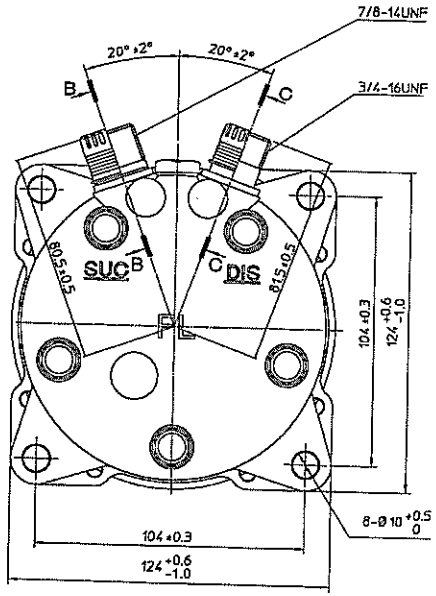

COMPRESSOR SPECIFICATIONS

BORE	Ø35 mm
STROKE	18.07 mm
DISPLACEMENT PER REVOLUTION	87 cc/rev
NUMBER OF CYLINDERS	5
MAXIMUM ALLOWABLE r.p.m.	7500 r.p.m.
MAXIMUM ALLOWABLE CONTINUOUS r.p.m.	6500 r.p.m.
REFRIGERANT	R-134a
OIL(SP-20 OR EQUIV.)	100 cc
ROTATION(CLUTCH SIDE VIEW)	CLOCKWISE
WEIGHT	kg

CLUTCH SPECIFICATIONS

RATED VOLTAGE	DC 12 V
BREAKAWAY TORQUE	2.2 kg-m
MINIMUM ENGAGEMENT VOLTAGE	7.5 V max
POWER CONSUMPTION	48 W (AL)
MAXIMUM ALLOWABLE r.p.m.	7500 r.p.m.
MAXIMUM ALLOWABLE CONTINUOUS r.p.m.	6500 r.p.m.
BELT TYPE	A2
PULLEY DIAMETER	Ø125 mm
WEIGHT	kg

OFFICIAL 06 AUG 2001 SIS COMP ENGRG

No.	REVISION RECORD	BY	DATE
△			
△			
△			
△			
△			

MATERIAL	PART NO. 5072	NAME	COMPRESSOR
THIRD ANGLE PROJECTION	SCALE 1:1		
DRAWN BY Michael	DATE 07.08.01	MODEL	SD5H09FL5072
CHECKED BY	DATE 08 Aug 01	DRAWING NO.	5072-6000S
APPROVED BY	DATE 08 Aug 01		

SANDEN SANDEN INTERNATIONAL (SINGAPORE) PTE LTD

A3 SIZE X 841