PROD	REV.	APPV DATE	REVISIONS	DRAN	DSGN	CHK	APPV
[illegible]	[illegible]	[illegible]	[illegible]	[illegible]	[illegible]		[illegible]
[illegible]	[illegible]	[illegible]	DELETED PART NUMBER [illegible] FROM LABEL.	[illegible]	[illegible]	[illegible]	[illegible]
[illegible]	[illegible]	[illegible]	CHANGED COL. MOUNT [illegible] FLAG. 1 WAS [illegible] FLAG. 2	[illegible]	[illegible]	[illegible]	[illegible]
[illegible]	[illegible]	[illegible]	CHANGED TORQUE, P/N WAS [illegible] NOW [illegible]	[illegible]	[illegible]	[illegible]	[illegible]
[illegible]	[illegible]	[illegible]	ADDED CONCENTRICITY SPEC. UPDATED TO CURRENT STANDARDS.	[illegible]	[illegible]	[illegible]	[illegible]
[illegible]	[illegible]	[illegible]	ADDED NOTE 1 ADDED PROTECTIVE TUBE LENGTH	[illegible]	[illegible]	[illegible]	[illegible]
[illegible]	[illegible]	[illegible]	CHANGED TO DOUBLE FIELD COIL. ADDED VIEW B-B, SECTION C-C WAS SECTION B-B, SECTION D-D WAS C-C	[illegible]	[illegible]	[illegible]	[illegible]
[illegible]	[illegible]	[illegible]	UPDATED TO CURRENT TITLE BLOCK COL. [illegible] WAS COL. [illegible]	[illegible]	[illegible]	[illegible]	[illegible]

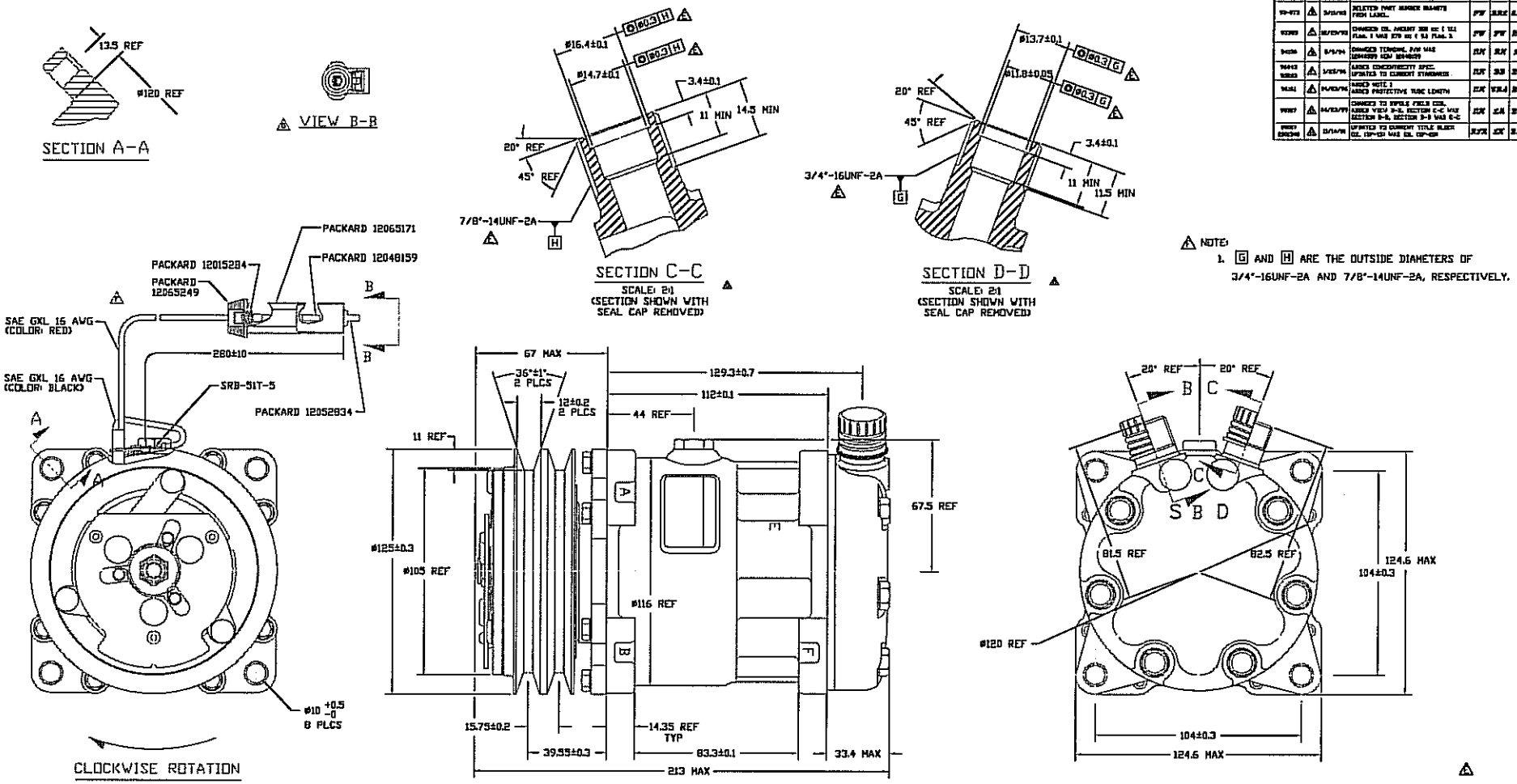

NOTE:
1. G AND H ARE THE OUTSIDE DIAMETERS OF 3/4"-16UNF-2A AND 7/8"-14UNF-2A, RESPECTIVELY.

COMPRESSOR SPECIFICATIONS

DISPLACEMENT PER REVOLUTION	154.9 cc / rev. (9.5cu.in. / rev.)
MAXIMUM ALLOWABLE R.P.M.	8000 R.P.M.
MAXIMUM ALLOWABLE CONTINUOUS R.P.M.	6000 R.P.M.
REFRIGERANT	R134a
OIL (SP-15)	300 cc (10.1 fl.oz.)
WEIGHT	7.4 kg (16.4 lb.)

CLUTCH SPECIFICATIONS

RATED VOLTAGE	DC 12V
BREAKAWAY TORQUE	3.5 kgf-m min. @ 12V
MINIMUM ENGAGEMENT VOLTAGE	7.5V @ AIR GAP 0.6mm REF
POWER CONSUMPTION	49 watts max.
BELT TYPE	A TYPE
MAXIMUM ALLOWABLE BELT TENSION	60 kgf per belt
PULLEY DIAMETER	ø125mm (4.9 in.)
CLUTCH TYPE	HEAVY DUTY

DO NOT SCALE

SANDEN

SCALE NOT 1:1 | SCALE NOT 1:1 | METRIC

INTERPRETATION OF THIS DRAWING PER ASME Y14.5M-1994

THIRD ANGLE PROJECTION | SIZE D

MATERIAL: -

TITLE: COMPRESSOR SD7H15JD4627

DWG. NO. 4627-6000 | REV H