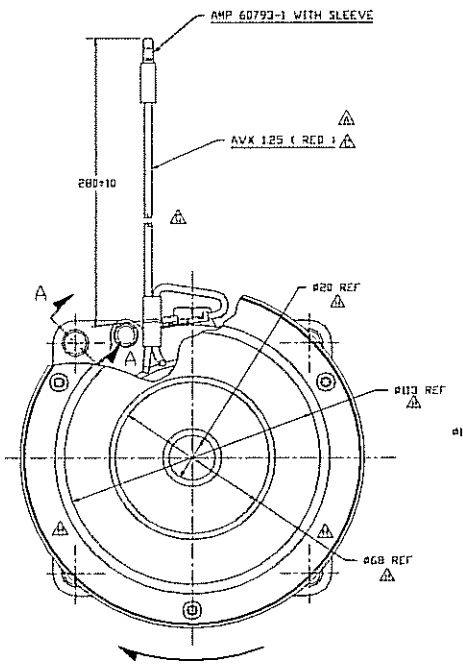

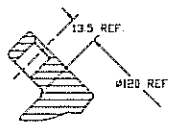

SECTION A-A

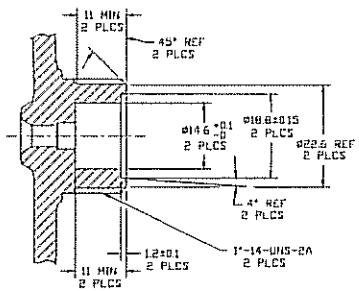

SECTION C-C

SCALE: 2:1
(SECTION SHOWN WITH SEAL CAP REMOVED)

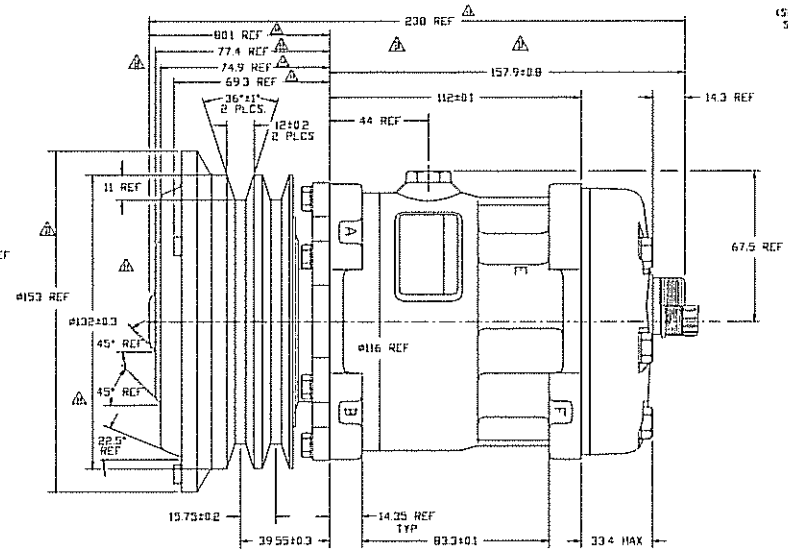

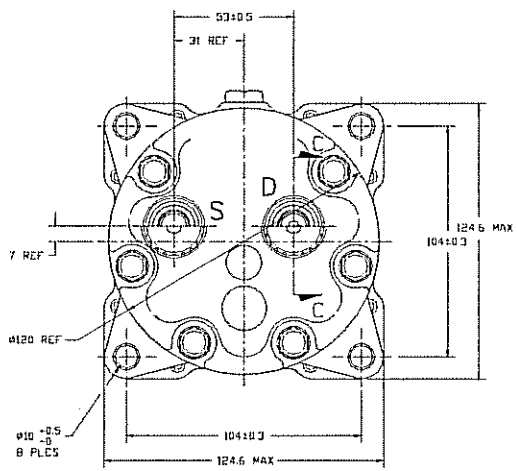

COMPRESSOR SPECIFICATIONS

DISPLACEMENT PER REVOLUTION	154.9 cc / rev. (9.5cu.in. / rev.)
MAXIMUM ALLOWABLE R.P.M.	6000 R.P.M.
MAXIMUM ALLOWABLE CONTINUOUS R.P.M.	4000 R.P.M.
REFRIGERANT	R134a
OIL (SP-15)	360 cc (10.1 fluz.)

CLUTCH SPECIFICATIONS

RATED VOLTAGE	DC 12V
BREAKAWAY TORQUE	3.5 kgf-m min. @ 12V
MINIMUM ENGAGEMENT VOLTAGE	7.5V @ AIR GAP 0.6mm REF.
POWER CONSUMPTION	43 watts max
BELT TYPE	A TYPE
MAXIMUM ALLOWABLE BELT TENSION	60 kgf per belt
PULLEY DIAMETER	ø132 mm (5.2 in.)
CLUTCH TYPE	HEAVY DUTY

DO NOT SCALE

SANDEN

SANDEN INTERNATIONAL (U.S.A.) INC.

DRAWN 11 SCALE REF | PLOTTED 14 SCALE REF | METRIC

This drawing and the information contained herein are CONFIDENTIAL and PROPRIETARY to Sanden International (U.S.A.) Inc. and received in CONFIDENCE and shall not be used, copied, or disclosed in whole or in part for any purpose without permission of Sanden International (U.S.A.) Inc.

INTERPRETATION OF THIS DRAWING PER ASME Y14.5M-1994

THIRD ANGLE PROJECTION

SIZE D

MATERIAL:

NAME COMPRESSOR

DWG NO. 4617-6000 REV J

REV	DATE	REVISIONS	DWN	DSGN	CHK	APPV
[illegible]	[illegible]	CHANGED CLUTCH TERMINAL FROM BLADE TO RED	PW	PW	[illegible]	[illegible]
[illegible]	[illegible]	CHANGED [illegible] TO [illegible] REF. CHANGED [illegible] REF TO [illegible] REF	[illegible]	[illegible]	[illegible]	[illegible]
[illegible]	[illegible]	CHANGED [illegible] TO [illegible] CHANGED [illegible] TO [illegible]	[illegible]		[illegible]	[illegible]
[illegible]	[illegible]	[illegible]	[illegible]	[illegible]	[illegible]	
[illegible]	[illegible]	[illegible]	[illegible]	[illegible]	[illegible]	[illegible]
[illegible]	[illegible]	CHANGED [illegible] FROM [illegible] TO [illegible]	[illegible]	[illegible]	[illegible]	[illegible]
[illegible]	[illegible]	CHANGED [illegible] TO [illegible] REMOVE ACTUAL "R" REVISION TO CURRENT SPECIFICATIONS	[illegible]	[illegible]	[illegible]	[illegible]
[illegible]		CHANGED [illegible] DUST COVER BOLTS FROM [illegible] TYPE				
[illegible]	[illegible]	ELIMINATED 3 DUST COVER BOLTS REVISED TO CURRENT SPECS.	[illegible]	[illegible]	[illegible]	[illegible]
[illegible]		CHANGED [illegible] DUST COVER				
[illegible]	[illegible]	[illegible]	[illegible]			