PROJ. NO.	REV.	DATE	REVISIONS	DWN	DSGN	CHK	APPV
	A		INITIAL RELEASE				

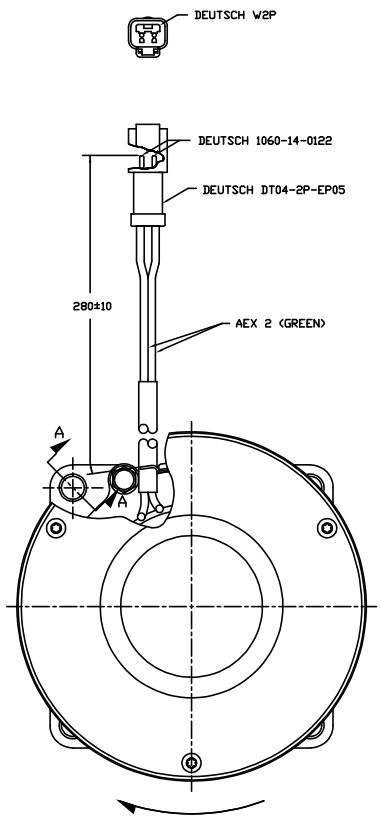

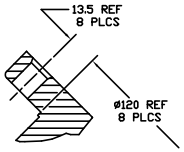

SECTION A-A

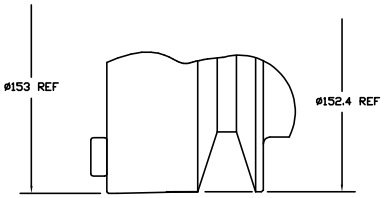

DETAIL C
SCALE 2:1

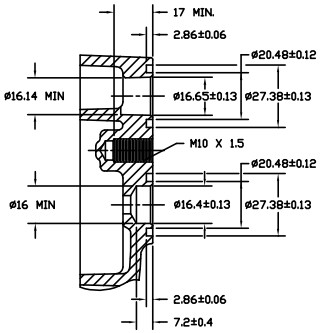

SECTION D-D
(SECTION WITH O-RINGS, SHIPPING PAD ASSEMBLY, AND BOLT REMOVED)

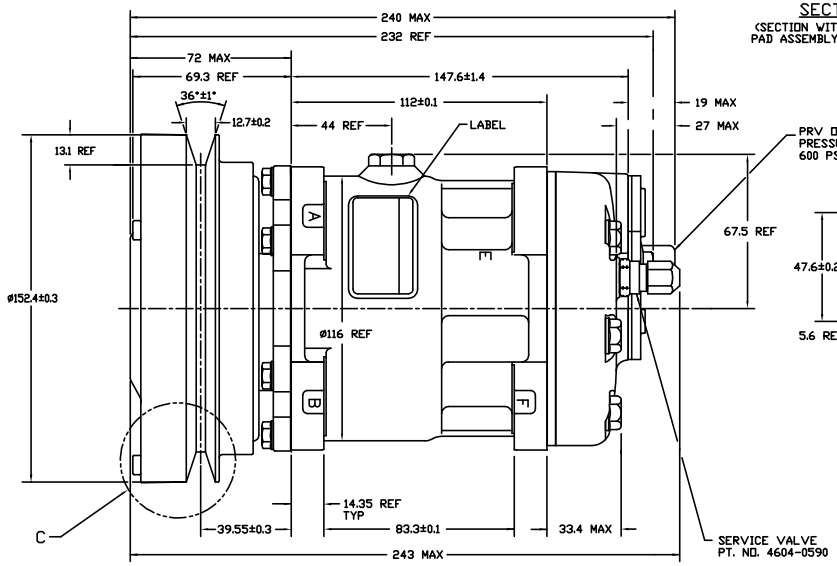

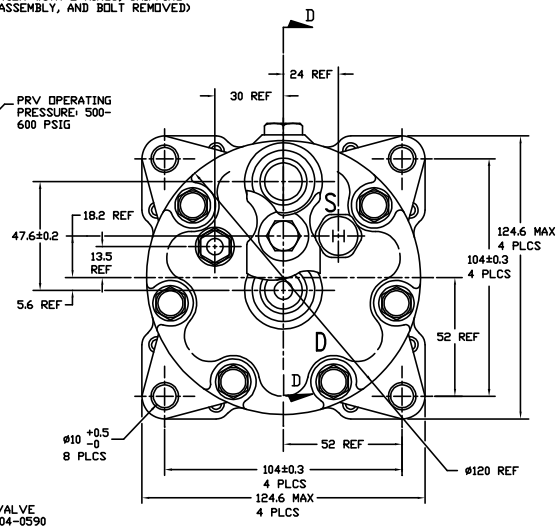

COMPRESSOR SPECIFICATIONS

DISPLACEMENT PER REVOLUTION	154.9 cc / rev. (9.5cu.in. / rev.)
MAXIMUM ALLOWABLE R.P.M.	4000 R.P.M.
MAXIMUM ALLOWABLE CONTINUOUS R.P.M.	4000 R.P.M.
REFRIGERANT	R134a
OIL (SP-15)	300cc (10.1 fl.oz.)
WEIGHT	8.5 kg (18.8 lb.)

CLUTCH SPECIFICATIONS

RATED VOLTAGE	DC 24V
BREAKAWAY TORQUE	3.5 kgf-m min. @ 24V
MINIMUM ENGAGEMENT VOLTAGE	16V @ AIR GAP 0.6mm REF
POWER CONSUMPTION	40 WATT MAX
BELT TYPE	A TYPE
MAXIMUM ALLOWABLE BELT TENSION	60 kgf PER BELT
PULLEY DIAMETER	ø152.4mm (6 in.)
CLUTCH TYPE	SEALED HEAVY DUTY

DO NOT SCALE

REV. LEVEL		
A	RELEASED FOR: CHECK DEVELOPMENT; DWN: Frank Harrington; CHK: Dennis Xu 4/6/04; APPV: JB PS; DATE: 6/12/04	
A	RELEASED FOR: DESIGN VALIDATION; DWN: Frank Harrington; APPV: JB PS; DATE: 4 13 2004	
A	RELEASED FOR: PRODUCTION VAL'D; DWN: Frank Harrington; APPV: JB PS; DATE: 4 13 2004	
A	RELEASED FOR: PRODUCTION; DWN: Frank Harrington; APPV: JB PS; DATE: 4 13 2004	

SANDEN
SANDEN INTERNATIONAL (USA), INC.

DRAWN SCALE REF 1:1 PLOTTED SCALE REF 1:1 METRIC

This drawing and the information contained hereon are CONFIDENTIAL and PROPRIETARY to Sanden International (U.S.A.), Inc., are received in CONFIDENCE and shall not be used, copied, or disclosed to others without the written permission of Sanden International (U.S.A.), Inc.

INTERPRETATION OF THIS DRAWING PER ASME Y14.5M-1994

THIRD ANGLE PROJECTION

SIZE D

MATERIAL:

NAME: COMPRESSOR

DWG. NO. 4479-6000 REV A