PDCN	REV.	APPV DATE	REVISIONS	DWN	DSGN	CHK	APPV
			INITIAL ISSUE				
2008042	A	7/15/08	UPDATED TO REFLECT LATEST REVISION OF CYL. HEAD 7832-6450	TG	AA	SN	RM

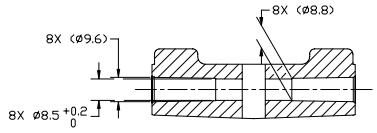

SECTION A-A

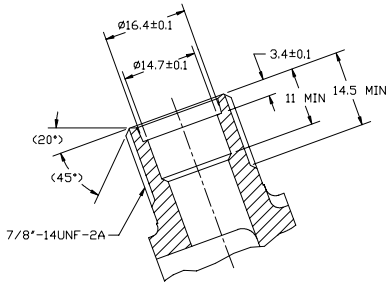

SECTION B-B
SCALE 2:1
(SECTION SHOWN WITH SEAL CAP REMOVED)

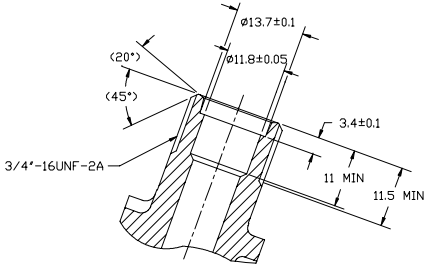

SECTION C-C
SCALE 2:1
(SECTION SHOWN WITH SEAL CAP REMOVED)

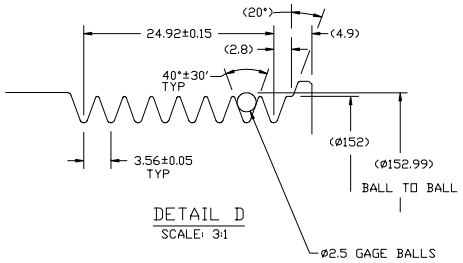

DETAIL D
SCALE: 3:1

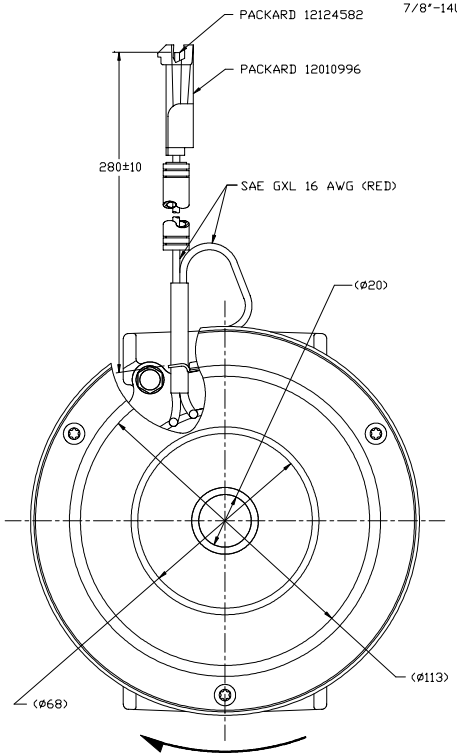

CLOCKWISE ROTATION

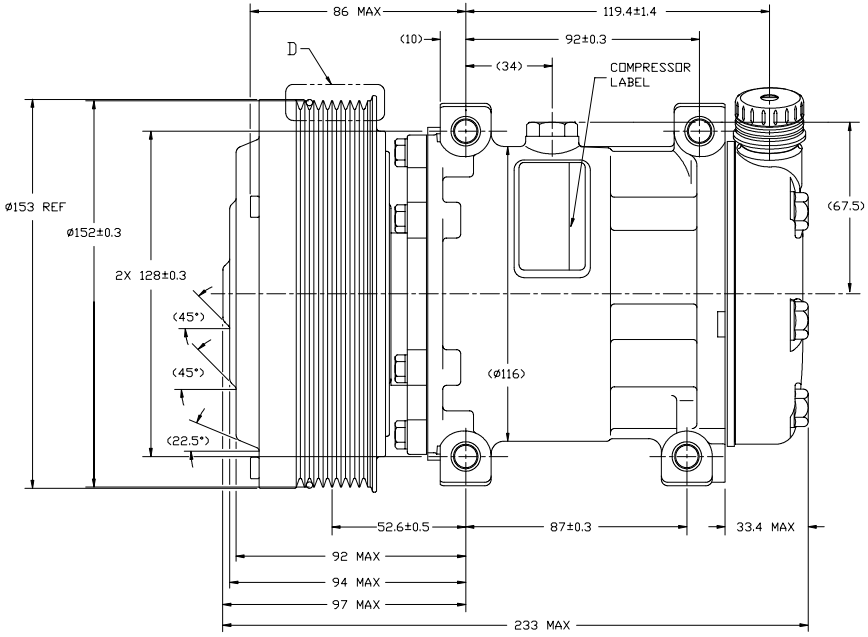

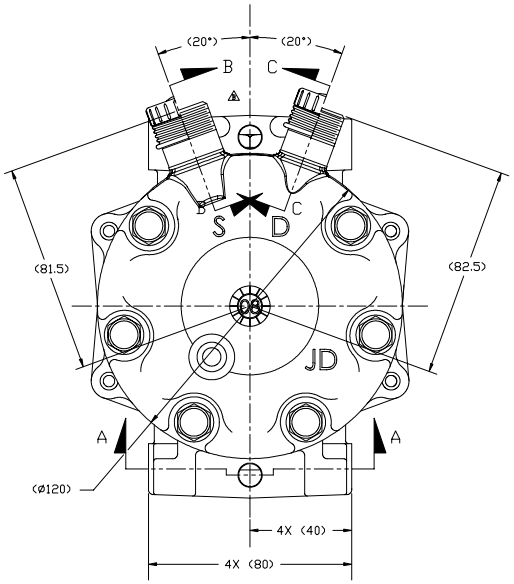

COMPRESSOR SPECIFICATIONS

DISPLACEMENT PER REVOLUTION	154.9 cc / rev. (9.5cu.in. / rev.)
MAXIMUM ALLOWABLE R.P.M.	4000 R.P.M.
MAXIMUM ALLOWABLE CONTINUOUS R.P.M.	4000 R.P.M.
REFRIGERANT	R134a
OIL (SP-15)	285 cc (9.6 fl.oz.)
WEIGHT	TBD

CLUTCH SPECIFICATIONS

RATED VOLTAGE	DC 12V
BREAKAWAY TORQUE	3.5 kgf-m min. @ 12V
MINIMUM ENGAGEMENT VOLTAGE	7.5V @ AIR GAP 0.6mm REF
POWER CONSUMPTION	43 watts max.
BELT TYPE	PV8 TYPE
MAXIMUM ALLOWABLE BELT TENSION	120 kgf
PULLEY DIAMETER	Ø152 mm (5.98 in.)
CLUTCH TYPE	SEALED HEAVY DUTY

NOTE:

1. COMPRESSOR SHALL MEET ALL PERFORMANCE REQUIREMENT PER SANDEN ENGINEERING STANDARD SES-CC-214.

DO NOT SCALE

REV. LEVEL	RELEASED FOR:
A	ENGG DEVELOPMENT
	DSGN Thomas Gallagher
	DWN Thomas Gallagher
	CHK Dennis Lee 8/3/07
	APPV. Edward Jacobs
	APPV. DATE 8/3/07
REV. LEVEL	RELEASED FOR:
A	DESIGN VALIDATION
	DSGN Thomas Gallagher 8/3/07
	APPV. Edward Jacobs
	APPV. DATE 8/3/07
REV. LEVEL	RELEASED FOR:
A	PRODUCTION VAL'D.
	DSGN Thomas Gallagher 8/3/07
	APPV. Edward Jacobs
	APPV. DATE 8/3/07
REV. LEVEL	RELEASED FOR:
	PRODUCTION
	DSGN
	APPV.
	APPV. DATE

SANDEN
SANDEN INTERNATIONAL (U.S.A), INC.

DRAWN SCALE REF 1:1 | PLOTTED SCALE REF 1:1 | METRIC

This drawing and the information contained hereon are CONFIDENTIAL and PROPRIETARY to Sanden International (U.S.A.), Inc., are received in CONFIDENCE and shall not be used, copied, or disclosed to others without the written permission of Sanden International (U.S.A.), Inc.

INTERPRETATION OF THIS DRAWING PER ASME Y14.5M-1994

THIRD ANGLE PROJECTION | SIZE D

MATERIAL:

NAME: COMPRESSOR

DWG. NO. 4050-6000 | REV B