PDCN	REV.	APPV DATE	REVISIONS	DWN	DSGN	CHK	APPV
	A		INITIAL ISSUE				

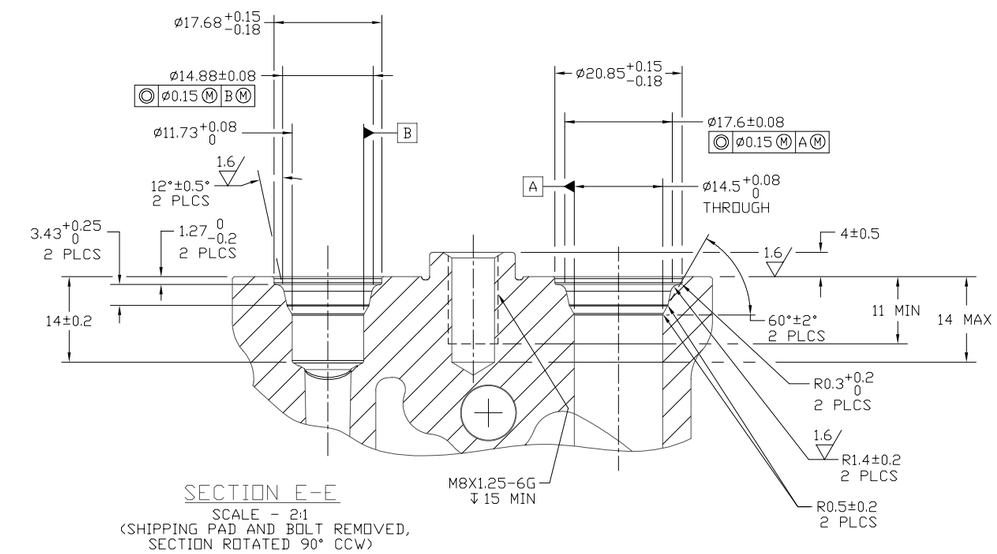

SECTION E-E
SCALE - 2:1
(SHIPPING PAD AND BOLT REMOVED, SECTION ROTATED 90° CCW)

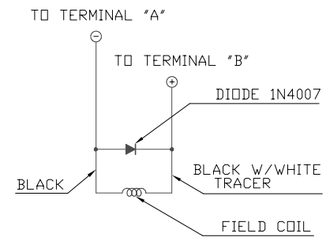

CIRCUIT DIAGRAM

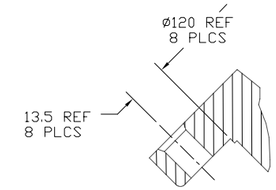

SECTION A-A

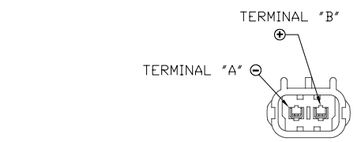

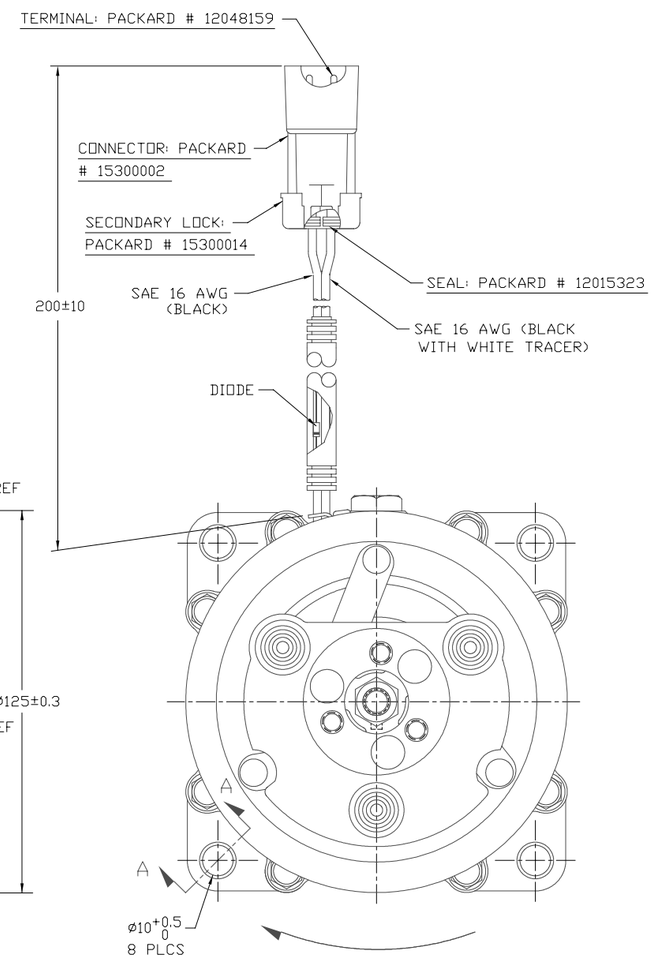

CLOCKWISE ROTATION

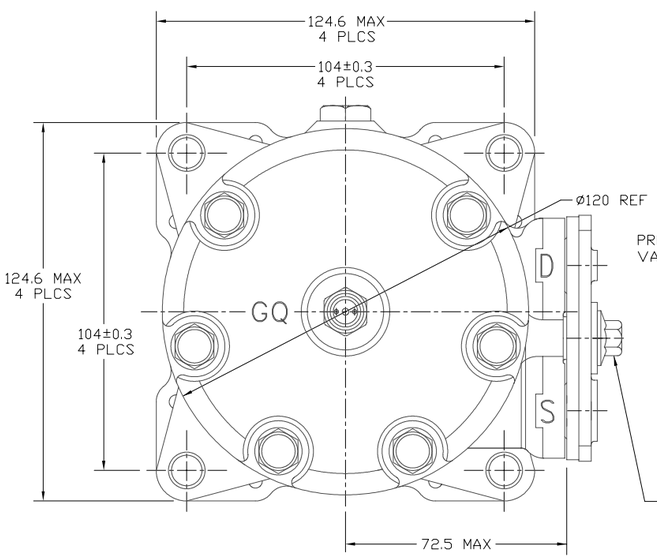

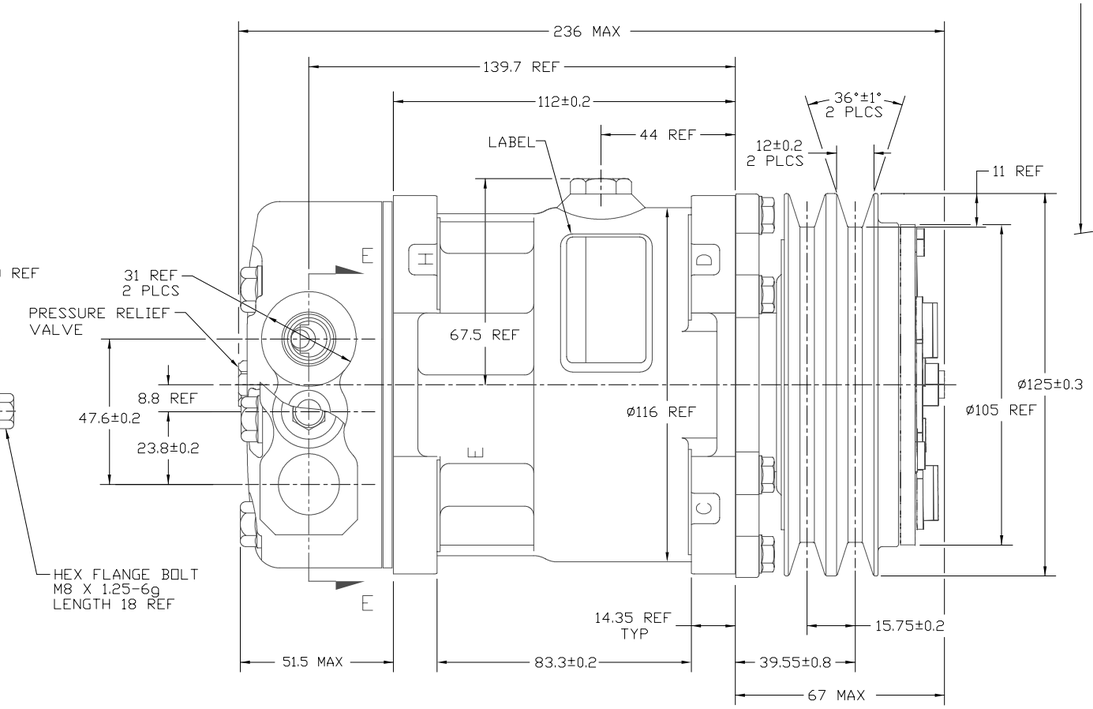

COMPRESSOR SPECIFICATIONS

DISPLACEMENT PER REVOLUTION	154.9 cc / rev. (9.5 in.³ / rev.)
MAXIMUM ALLOWABLE R.P.M.	8000 R.P.M.
MAXIMUM ALLOWABLE CONTINUOUS R.P.M.	6000 R.P.M.
REFRIGERANT	R134a
OIL (SP-15)	300 cc (10.1 fl. oz.)
CUSTOMER PART NUMBER	TBD

CLUTCH SPECIFICATIONS

RATED VOLTAGE	DC 12V
BREAKAWAY TORQUE	3.5 kgf-m MIN. @ 12V
MINIMUM ENGAGEMENT VOLTAGE	7.5V @ AIR GAP 0.6mm REF
POWER CONSUMPTION	49 WATTS MAX.
BELT TYPE	A TYPE
MAXIMUM ALLOWABLE BELT TENSION	60 kgf PER BELT
PULLEY DIAMETER	ø125mm (4.9 in.)
CLUTCH TYPE	HEAVY DUTY

NOTE:
1. DIMENSIONS ARE TO VIRTUAL SHARP CORNERS UNLESS OTHERWISE SPECIFIED.

DO NOT SCALE

REV. LEVEL	RELEASED FOR:	
A	ENG'G. DEVELOPMENT	DSGN M. Balthazar; DWN M. Balthazar; CHK Dennis Lee 5/8/07; APPV. Ed Arreola; APPV. DATE 5/8/07
A	DESIGN VALIDATION	DSGN M. Balthazar; APPV. Ed Arreola; APPV. DATE 5/8/07
A	PRODUCTION VAL'D.	DSGN M. Balthazar; APPV. Ed Arreola; APPV. DATE 5/8/07
A	PRODUCTION	DSGN M. Balthazar; APPV. Ed Arreola; APPV. DATE 5/8/07

SANDEN
SANDEN INTERNATIONAL (U.S.A.), INC.

DRAWN SCALE REF 1:1 | PLOTTED SCALE REF 1:1 | METRIC

This drawing and the information contained hereon are CONFIDENTIAL and PROPRIETARY to Sanden International (U.S.A.), Inc., are received in CONFIDENCE and shall not be used, copied, or disclosed to others without the written permission of Sanden International (U.S.A.), Inc.

INTERPRETATION OF THIS DRAWING PER ASME Y14.5M-1994

THIRD ANGLE PROJECTION | SIZE D

MATERIAL:

NAME: COMPRESSOR

DWG. NO. 4041-6000 | REV. A